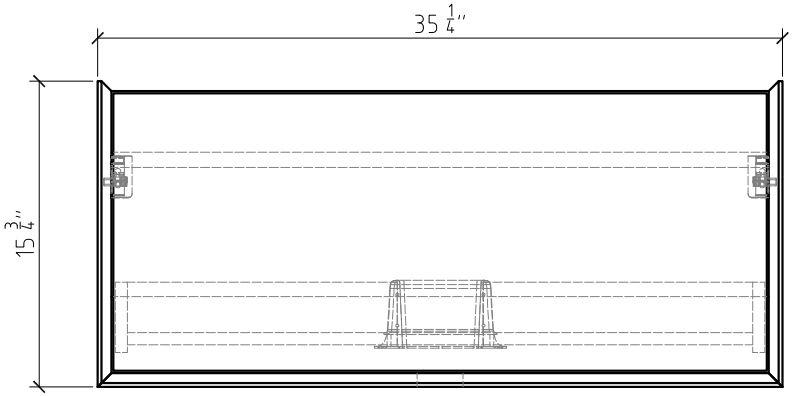
35 1/4"
15 3/4"

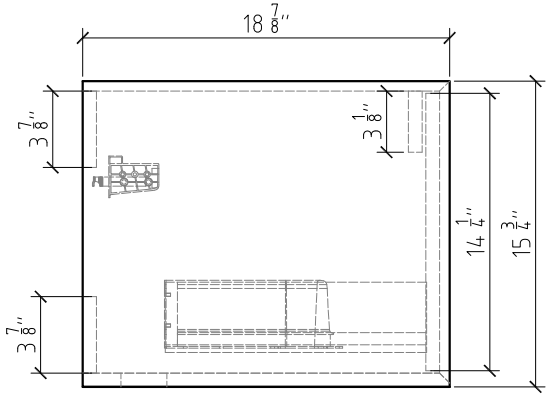
18 7/8"
3 7/8"
3 1/8"
14 1/4"
15 3/4"
3 7/8"

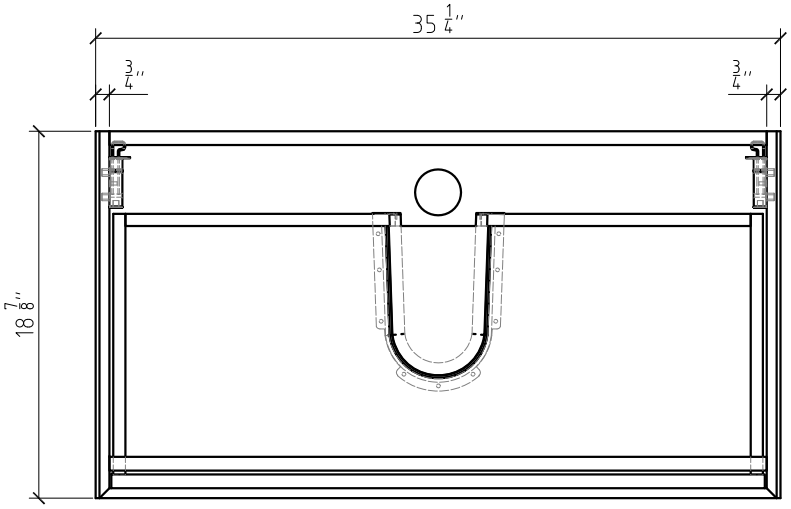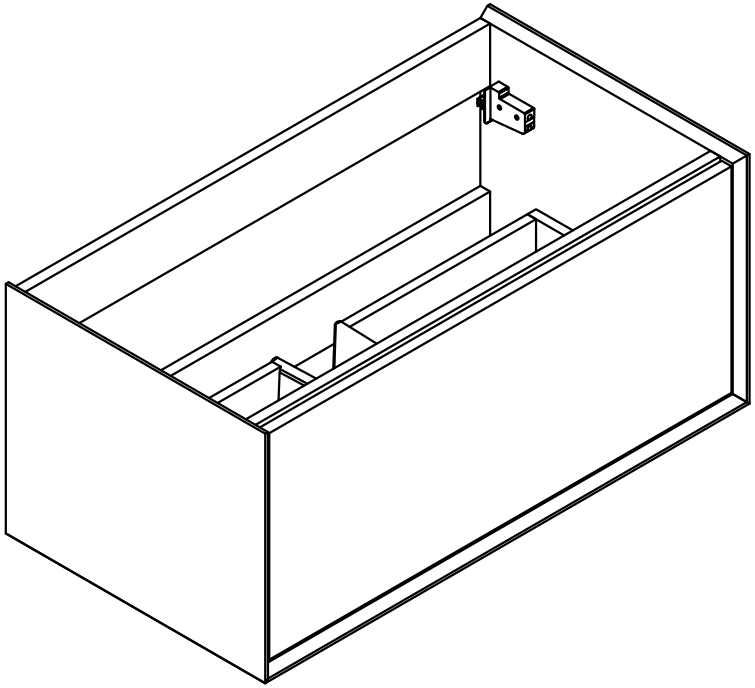
35 1/4"
3/4"
3/4"
18 7/8"